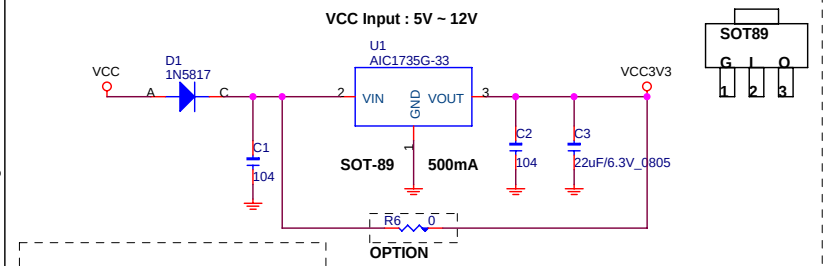

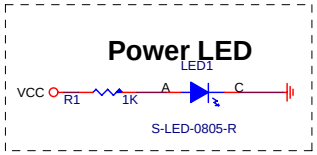

Pin	Name	Comment
1	SDA	Serial Data, bidirectional
2	VSS	Ground
5	VDD	Supply Voltage
6	SCL	Serial Clock, bidirectional
3,4	NC	Not Connected

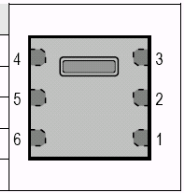

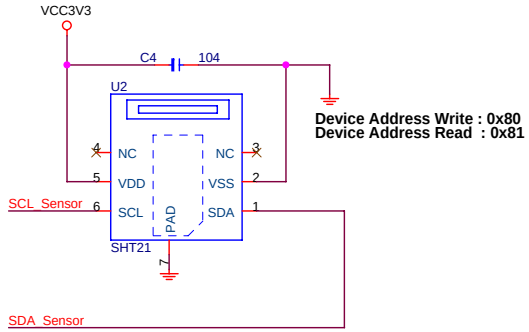

HUMIDITY + TEMPERATURE

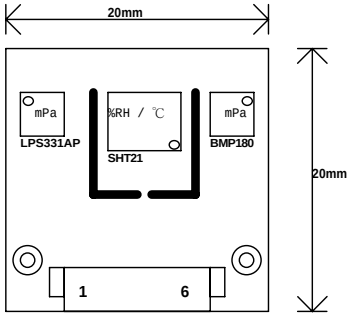

Header 6 pin - 1.25mm Right Angle

1: 5V-INPUT
2: GND
3: SCL
4: SDA
5: RESET\ (Reserved)
6: 3.3V-OUT

Copy From DM148C-J5

Interface

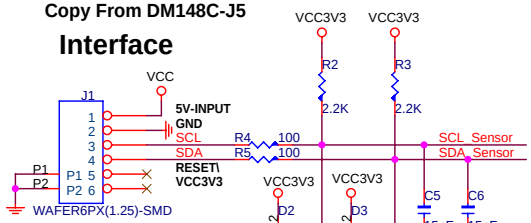

Top

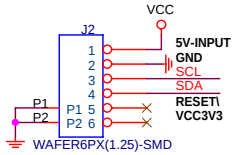

Bottom

Copy From DM148C-J5

PRESSURE

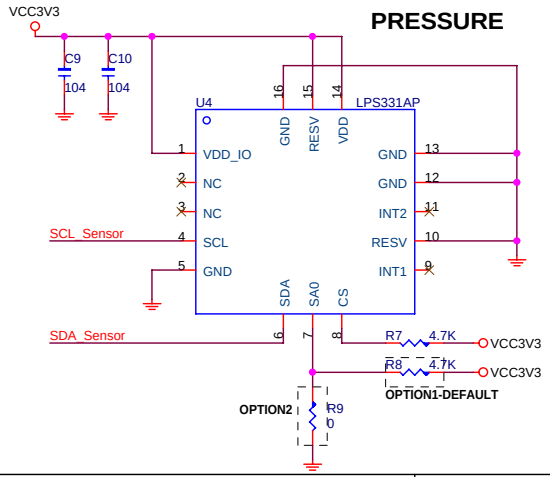

OPTION1-DEFAULT
Device Address Read : 0xBB
Device Address Write : 0xBA

OPTION2
Device Address Read : 0xB9
Device Address Write : 0xB8

PRESSURE

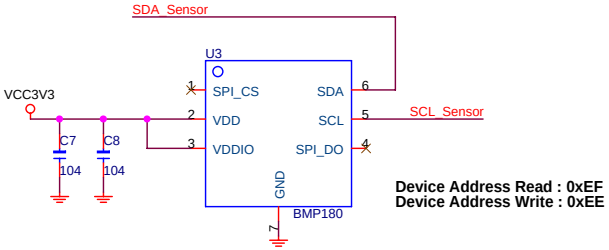

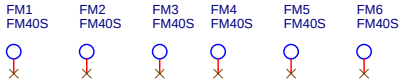

2011/09/22

RM-G185-KIT

2Layers, 1.6mm

PCB NO. DM185
RoBoard Humidity + Temperature + Pressure module

VER :1.0

DMP ELECTRONICS INC.		
Title	RoBoard Humidity + Temperature + Pressure module	
Size	Document Number DM185	Rev 1.0
Date: Thursday, September 22, 2011	Sheet 1 of 1	